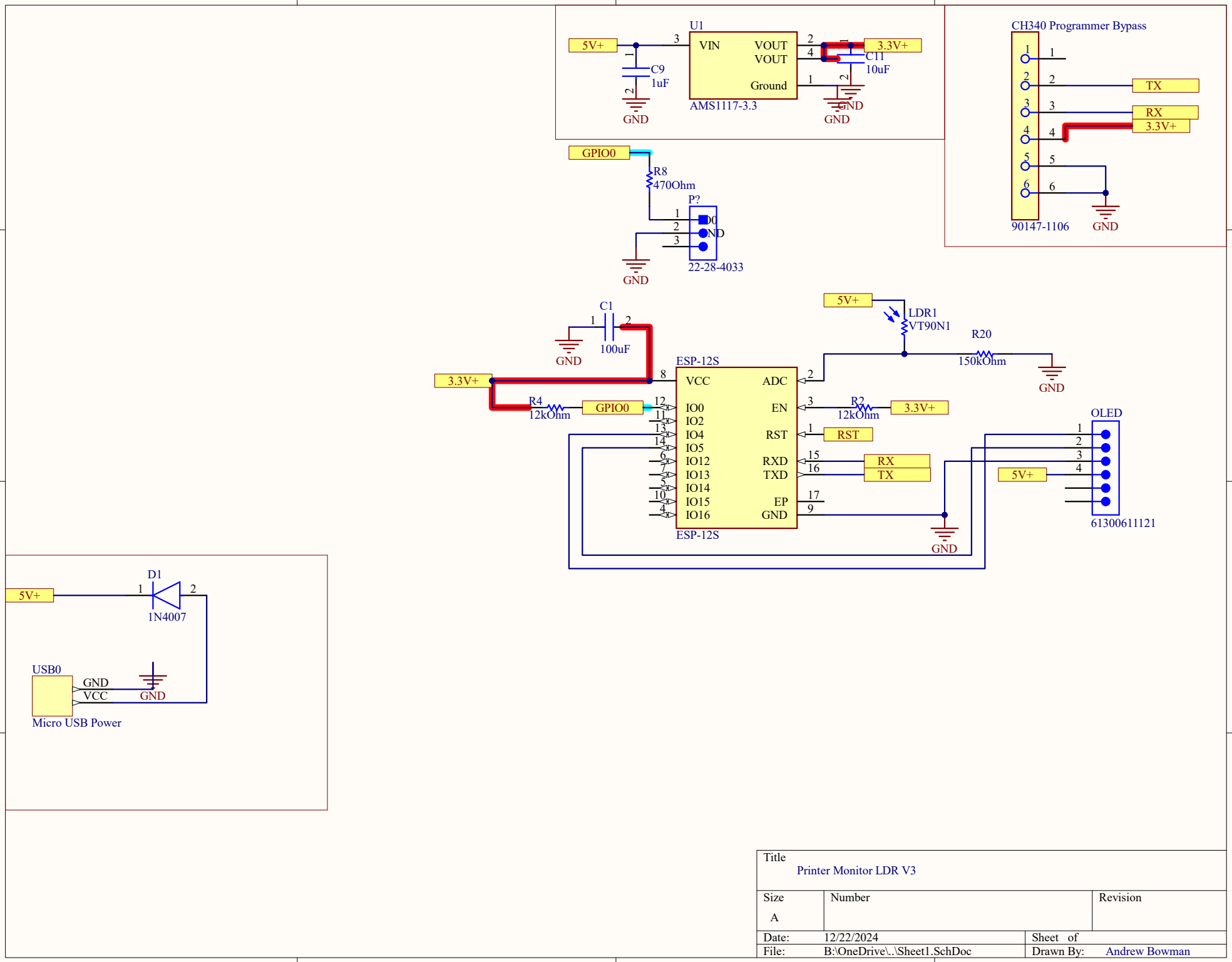

Title		
Printer Monitor LDR V3		
Size: A	Number	Revision
Date: 12/22/2024	Sheet of	
File: B:\OneDrive\..\Sheet1.SchDoc	Drawn By: Andrew Bowman	